MOYER DIEBEL®

Simply Engineered Better

Project _____

Item No. _____

Quantity _____

201HT

Undercounter High Temperature
Dishwashing Machine
with Built-in Booster Heater

SPECIFIER STATEMENT

Specified unit will be Moyer Diebel Model 201HT undercounter high temperature dishwashing machine with built-in booster.

Features include 15-3/4" door opening, standard detergent and rinse-aid dispensing pumps. Built-in 70°F rise booster, and wash tank heater maintains water required temperature.

1 year parts and labor warranty.

Vent hood is not recommended as unit does not produce excessive steam. Always follow local building code guidelines.

STANDARD FEATURES

- **Multi-Power** allows for infield conversion to 208-240 volt and/or single to three phase
- **Soft Start** to protect glasses and dishes from chipping and breaking
- **Rinse Sentry** extends the rinse cycle to ensure 180°F final rinse
- **Built-in Booster** 180°F final rinse (standard 6kW 70F° rise or optional 9kW high speed recovery booster)
- **Scrub Feature** extends wash cycle for heavily soiled wares
- **Delime Feature** extends cycle up to 20 min for cleaning unit
- Pumped drain permits use of the drain connection up to 6' of which 3' can be vertical
- 25 racks per hour*
- Advance digital temperature monitoring
- Fresh water wash and pumped rinse
- Built-in detergent and rinse-aid pumps
- Advance service diagnostics
- Upper and lower interchangeable spray arms
- Stainless steel top and side panels
- Counter balance door
- Wash tank heater
- Two 20" x 20" racks, one peg and one flat
- One year parts and labor warranty

* Excludes 20 second NSF load/unload time

OPTIONS & ACCESSORIES

☐ 9kW high speed recovery booster	–
☐ Flat bottom dishrack	P/N 101273
☐ Peg dishrack	P/N 101285
☐ 6" Stand	P/N 0712393
☐ 17RS – 17" Stand	P/N 0708757
☐ 1" roller casters	P/N 0712480
☐ Drain Water Tempering Kit (factory installed)	P/N 0712382-1
☐ Low Chemical Alarm (factory installed)	P/N 0712314

ND031 Printed in U.S.A.

Moyer Diebel Ltd. – USA
3765 Champion Blvd, NC 27105 • 336/661-1992 • Fax: 336/661-1979
moyerdiebel.com

MOYER DIEBEL®

Simply Engineered Better

201HT

Undercounter
High Temperature Dishwashing Machine
with Built-in Booster Heater

Dimensions shown in inches and [millimeters]

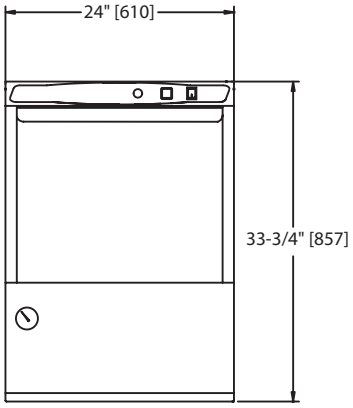

Front View

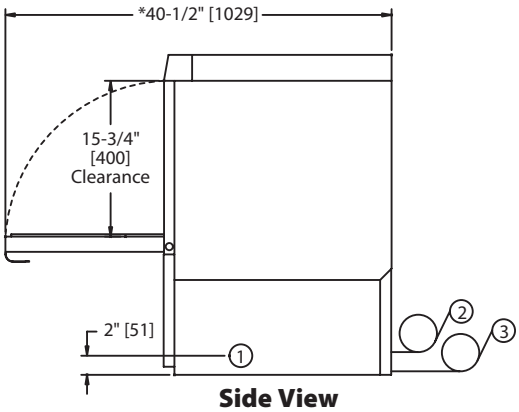

Side View

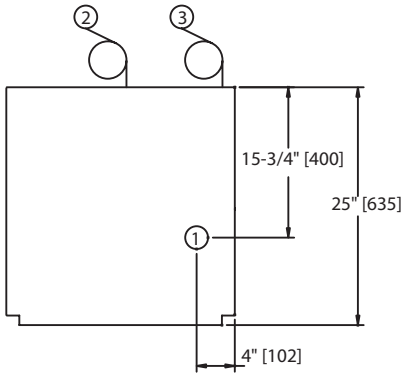

Plan View

*Note: Allow additional 3" clearance from wall.

Utilities

1	**Electrical Connection** 208-240/60/1; 3 wire plus ground, (See Box). 208-240/60/3; 4 wire plus ground, (See Box).
2	**Hot Water** 110°F/43°C Min., hot water for 70°F/39°C rise booster. 5 ft. long 1/2" I.D. flexible fill hose with 3/4" hose connector. Flow pressure: 25-95 psi (173-656 kPa)
3	**Drain Connection** 5/8" [15.9] I.D. flexible reinforced hose, 6 ft. [1829] long. Max. drain flow 15 US gpm. [12.5 imp gal] Max. drain height 3 ft. [914]

201HT with 70°F Rise Booster

Electrical Specs.	Rated Amps	Minimum Supply Ckt. Conductor Ampacity	Maximum Overcurrent Protective Device
208/60/1	32	40	40
240/60/1	36	40	40
208/60/3	22	30	30
240/60/3	24	30	30

201HT with 9 kW High Speed Recovery Booster

Electrical Specs.	Rated Amps	Minimum Supply Ckt. Conductor Ampacity	Maximum Overcurrent Protective Device
208/60/1	45	60	60
240/60/1	50	60	60
208/60/3	29	35	35
240/60/3	33	40	40

	Uncrated	Crated
Height	33-3/4"	39-1/2"
Width	24"	25"
Depth	25"	25-1/2"
Ship Wt. lbs/kg	178	198

* Adjustable foot height - 11/4" [45]

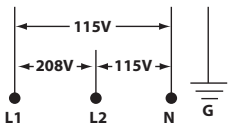

*Note: Electrical supply service must be a 3-wire plus ground for connection as shown.

Note: Field convertible to accept 3 phase power.

SPECIFICATIONS

Capacity	
*Racks per hr.	25
Motor Horsepower	
Wash	1
Water Consumption	
Per hr. (max. use)	38.4 US gal;
Per rack	1.8 US gal;
Temperatures °F	
Wash (minimum)	150
Rinse (minimum)	180
Heating	
Tank heat, electric (kW)	2.0
Electric booster	
(kW required for 70°F rise)	6
(kW required for high speed recovery)	9
Time Cycle in Seconds	
Wash	90
Rinse	26
Drain/fill	25
Total	141

* Excludes 20 second NSF load/unload time

Warning: Plumbing and electrical connections should be made by qualified personnel who will observe all the applicable plumbing, sanitary and safety codes.

Due to an ongoing value analysis program at Moyer Diebel, specifications in this catalog are subject to change without notice.

Moyer Diebel – USA
3765 Champion Blvd., NC 27105
336/661-1992 • Fax: 336/661-1979

moyerdiebel.com