Variable Speed Immersion Blender AX-VIB750

Stainless Steel Whisk (Optional)

Carrying Case (Optional)

Stainless Steel Bell

Intergrated Ventilation System

Quick-change "bayonet" slot

Ergonomic handle

Optional Wall Mount

Standard Features

- Variable speed control settings with stabilizer
- Double insulated motor with efficient engine cooling system to prevent overheating
- Sturdy, lightweight ABS frame
- Ergonomic handle and rubber cover for a secure grip
- Powerful performance motor
- Push button safety system prevents unintentional motor activation
- Quick coupling system
- Totally removable rods allows for thorough cleaning which extends life
- 18" interchangeable stainless steel shaft with stainless steel bells
- Attachments are dishwasher safe and easily disassembled for cleaning (tool included)

Optional

- Carrying Case
- Stainless steel whisk

Variable Speed Immersion Blender

Axis is a registered trademark of MVP Group Corp.

3560 NW 56th Street
Fort Lauderdale, FL, United States 33309
Telephone: 786.600.4687 / Toll Free: 844.218.8477
Fax: 786.661.4100

5659 Royalmount Ave.
Montreal, QC, Canada H4P 2P9
Telephone: 514.737.9701 / Toll Free: 888.275.4538
Fax: 514.342.3854 / Toll Free: 877.453.8832
sales@mvpgroupcorp.com / mvpgroupcorp.com

Variable Speed Immersion Blender AX-VIB750

Variable Speed Immersion Blender

AX-VIB750

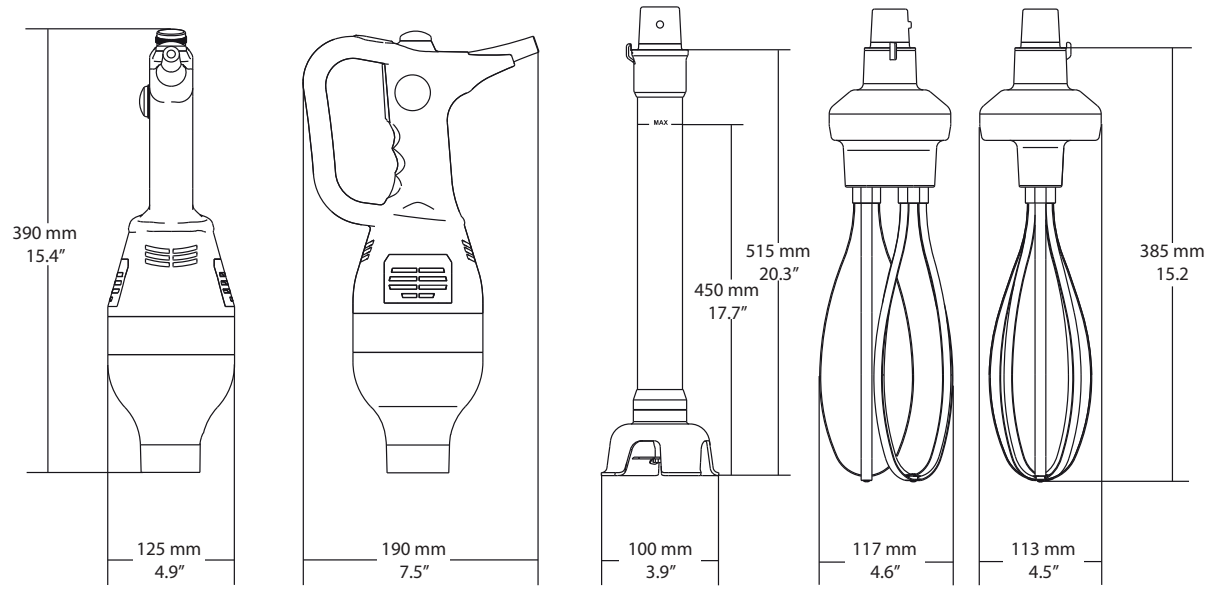

Model	Watt / HP	Electrical	Whisk RPM	Blender RPM	Working Capacity	Product Dimensions	Shipping Dimensions	Unit Weight	Ship Weight
AX-VIB750	750 W 1.0 HP	120V/60Hz/1Ph	350 - 1,800	2,300 - 15,200	50 Gal 200 L	5″ x 7.5″ x 15.4″ 125 x 190 x 390 mm	22.1″ x 13″ x 7.1″ 560 x 330 x 180 mm	7 lbs 3.2 kg	13 lbs 5.9 kg

Due to continuing product development, to ensure the best possible performance, the specifications are subject to change without prior notice.

Axis is a registered trademark of MVP Group Corp.

3560 NW 56th Street
Fort Lauderdale, FL, United States 33309
Telephone: 786.600.4687 / Toll Free: 844.218.8477
Fax: 786.661.4100

5659 Royalmount Ave.
Montreal, QC, Canada H4P 2P9
Telephone: 514.737.9701 / Toll Free: 888.275.4538
Fax: 514.342.3854 / Toll Free: 877.453.8832
sales@mvpgroupcorp.com / mvpgroupcorp.com