centerline by Traulsen

Project _____

AIA # _____ SIS # _____

Item # _____ Quantity _____ C.S.I. Section 114000

CLPT-4812

Compact Sandwich Prep Table
Self-Contained Solid Doors

This unit is listed to the applicable UL, CSA and NSF Standards by an approved NRTL. Consult the factory or unit's data plate for approval information.

STANDARD PRODUCT FEATURES

- High Quality Stainless Steel Construction
- Anodized Aluminum Interior
- LED Display Control for Accuracy and Easy Monitoring
- Stay Open Door Feature at 105°
- Capillary Tube Metering Device
- 12" Deep, 3/4" Thick, Full Length Removable Cutting Board
- NSF Approved White Polyethylene Board
- Maintains Cabinet Temperature of 32°F to 41°F
- NSF Rated for Use with 6" Deep Pans
- Top Cut-Out Accommodates 1/6 Size Pans (4" deep plastic pans provided)
- Two (2) Adjustable, Heavy Duty Epoxy Coated Shelves Per Section
- Field Reversible Door(s)
- Set of Four (4) 4" High Casters with Locks Standard on Front Casters
- Gasket-Protecting Retainer
- Self-Contained Rear-Mounted Refrigeration System
- High-Density, Non-CFC Foamed in Place Polyurethane Insulation
- 3 Year Parts & Labor Warranty, Additional 2 Years on Compressor Parts

ACCESSORIES & OPTIONS (Available at Extra Cost)

+ Additional Epoxy Coated Shelves on Pilasters
+ Set of Four (4) 6" High Legs
+ Set of Four (4) 6" High Casters
+ Set of Four (4) 2-3/4" High Casters

AVAILABLE CONFIGURATIONS

MODELS	HINGING
CLPT-4812-SD-LR	Solid Doors, Left/Right
CLPT-4812-SD-LL	Solid Doors, Left/Left
CLPT-4812-SD-RR	Solid Doors, Right/Right

Model	Doors	Shelves	Pans (1/6)	Dimensions L x D x H (in.)	Voltage	Amps	NEMA	Cu. Ft.
CLPT-4812	2	4	12	48.56 x 32.75 x 40*	115/60/1	5.0	5 - 15P	N/A

*Note: 40 in. height without casters

Approved by _____ Date _____ Approved by _____ Date _____

CLPT-4812
Compact Sandwich Prep Table

MODEL - CLPT-4812

Solid Door Models

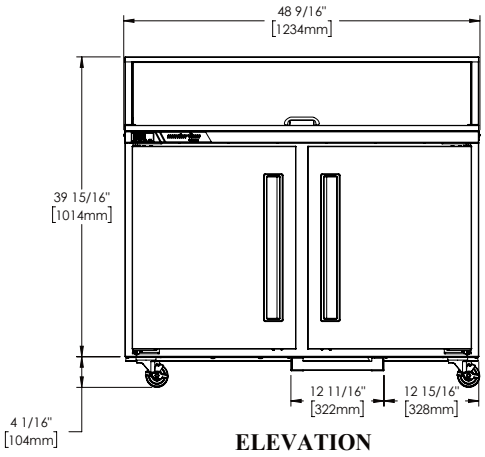

ELEVATION

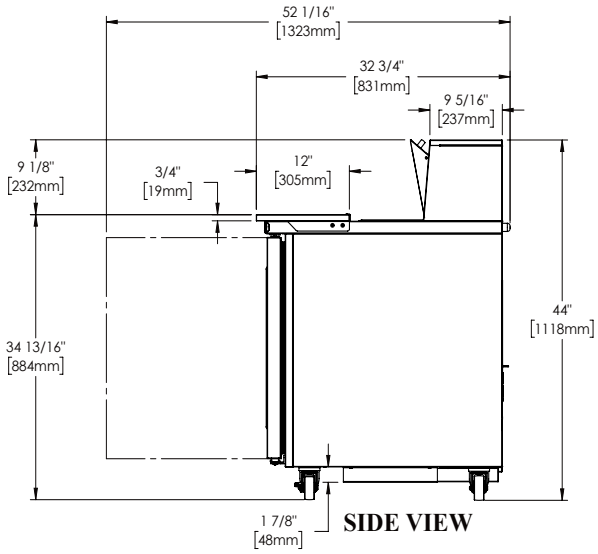

SIDE VIEW

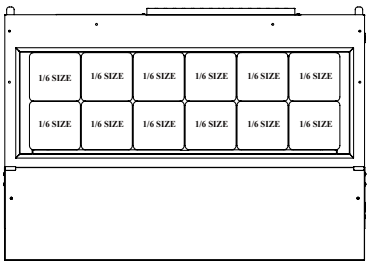

PAN LAYOUT

SPECIFICATIONS

CONSTRUCTION, HARDWARE, INSULATION

Cabinet exterior front, sides, and door(s) are constructed of stainless steel. Cabinet interior is constructed of anodized aluminum. 1/6 size plastic pans and a set of four (4) 4" high casters are included. Doors are equipped with a gasket protecting retainer. Both the cabinet and door(s) are insulated with an average of 2-3/8" thick high density, non-CFC, foamed in place polyurethane insulation.

REFRIGERATION SYSTEM

A rear mounted, self-contained, balanced refrigeration system using environmentally friendly, non-flammable R-450A refrigerant is provided. It features an easy to clean rear facing condenser, capillary tube metering device, and an air-cooled hermetic compressor. A 9' cord and plug is provided. Standard operating temperature is 32°F to 41°F.
Energy efficient refrigeration system maintains safe product temperatures. Condenser is located in back of unit for easy maintenance and zero clearance.

CONTROLLER

The easy to use electronic digital control is supplied standard. It includes a 3-Digit LED display, and a Fahrenheit or Celsius temperature scale display capability.

INTERIOR

Standard interior arrangements include two (2) epoxy coated wire shelves per section, mounted on pilasters. Recommended load limit per shelf should not exceed 150 lbs.

WARRANTY

Both a 3 Year Parts & Labor Warranty and additional 2 Years on Compressor Parts Warranty are supplied standard.

MODELS	CLPT-4812
ELECTRICAL DATA	
Voltage	115/60/1
Full Load Amperes	5.0
REFRIGERATION DATA	
Refrigerant	R-450A
Refrigerant Charge oz.	11.0 (312 gr)
BTU/HR[1] | H.P.	2134 | 1/4
SHIPPING DATA	
Depth Crated in.	35 (88.9 cm)
Height Crated in.	49 (124.5 cm)
Length Crated in.	53 (134.6 cm)
Volume Crated cu. ft.	52.6 (1490 l)
Net Weight lbs.	326 (147.8 kg)
Gross Weight lbs.	362 (164.2 kg)

NOTES:
1. BTU/HR based on a 90°F ambient and 20°F evaporator

Equipped with one NEMA 5-15P Plug

As continued product improvement is a policy of Traulsen, specifications are subject to change without notice.

CAD and/or Revit Files Available