BEVERAGE-AIR

Project: _____	AIA#
Item: _____	
Location: _____	SIS#
Approved: _____	

BOTTOM MOUNT REACH-IN FREEZERS

HBF44HC Glass Half-Door Bottom Mount Freezer
Hydrocarbon Series

MODEL:
HBF44HC-1-HG

HBF44HC BOTTOM MOUNT MODELS: HORIZON SERIES

3 Year Parts/Labor Warranty
Additional 4 Year Compressor Warranty

CABINET CONSTRUCTION

- Stainless steel front, side, and grille (galvanized back & bottom)
- Stainless steel interior
- LED lighting
- Full electronic control with one-touch defrost
- Expansion valve technology
- One–piece grille allow easy removal/installation for preventative maintenance
- Self closing door with 120º stay open feature
- Spring-loaded style hinges
- Plug-in magnetic door gaskets
- Three (3) heavy duty epoxy coated wire shelves per door section
- 6” Casters with two (2) brakes

OPTIONS & ACCESSORIES

- Stainless steel universal tray slide pair, 1 tray slide set for (1) 18” x 26” or (2) 14” x 18” pans (AC)
- 3” caster or 6” legs
- Epoxy shelves
- Shelf clips
- Door locks
- Remote option* (see note on back page)

REFRIGERATION SYSTEM

- Uses environmentally friendly, energy efficient R290 refrigerant, and meets all regulatory requirements for CARB, SNAP, DOE & more
- Hot gas condensate evaporator
- Adaptive defrost
- Epoxy coated evaporator coil
- Freezer capable of maintaining product temperature down to -10ºF

Please verify qualifying units by visiting:
www.energystar.gov/cfs

3779 Champion Blvd., Winston-Salem, NC 27105
1-888-845-9800 Fax: 1-336-245-6453
Beverage-Air.com Sales@bevair.com

BEVERAGE-AIR

Bottom Mount Reach-ins Freezer

Model: HBF44HC-1-HG

MODEL	HBF44HC-1-HG
EXTERNAL DIMENSIONAL DATA	
Width Overall	47”
Depth Overall with Handle	33 3/4”
Height Overall with 6” Casters	84 1/4”
Number of Doors	4
Depth with Door Open 90º	53 1/2”
Door Opening (in)	(4) 20 1/8” x 52 5/8”
INTERNAL DIMENSIONAL DATA	
NET Capacity (cubic ft.)	44
Internal Width Overall (in)	44”
Internal Depth Overall (in)	26”
Internal Height Overall (in)	61 5/8”
Internal Height Useable (in)	53”
Number of Shelves	6
ELECTRICAL DATA	
Full Load Amperes 115/60/1	11.0
REFRIGERATION DATA	
Horsepower	3/4
Capacity (BTU/Hr)*	2312
SHIPPING DATA	
Gross Weight - Crated	588 lbs
Height - Crated	85”
Width - Crated	49”
Depth - Crated	36”

*NOTE: Remote units are field wired and come with 6” legs. Refrigerant must be specified at time of order.

Model Views

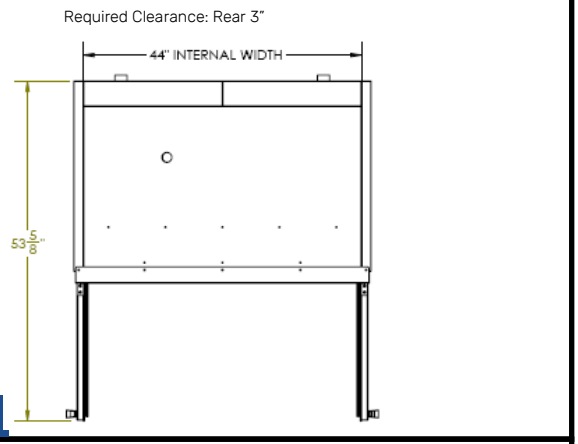

Plan View

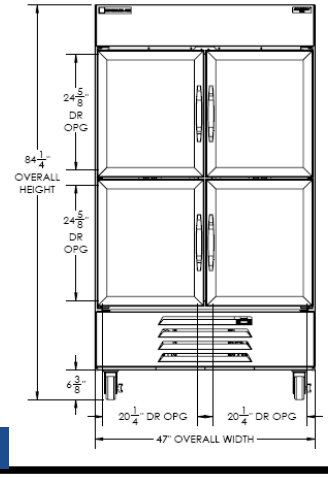

Elevation View

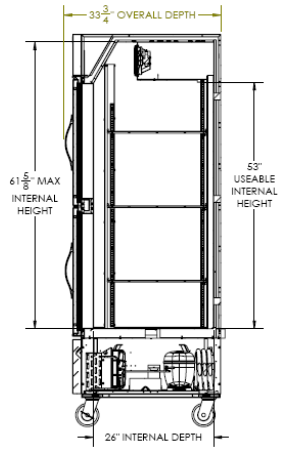

Side View

ELECTRICAL CONNECTION

115/60/1
NEMA-5-15P

Units pre-wired at factory and include 8’ long cord and plug set.

3779 Champion Blvd., Winston-Salem, NC 27105 1-888-845-9800 Fax: 1-336-245-6453 Beverage-Air.com Sales@bevair.com

an Ali Group Company

The Spirit of Excellence