ELEVATION SERIES CUBE ICE MAKER
CIM0836/0835

Ice-O-Matic
Ice. Pure and Simple

CIM0836/0835 CUBE ICE MAKER

Model:

- ☐ CIM0836
- ☐ CIM0835

CIM0836 ON B55

Features and Benefits

- 30.25" (768 mm) wide space-saving design.
- Produces up to 922 lbs (418 kg) of ice per day.
- *Energy and Environment*
  - Exceeds new 2018 DOE (Department of Energy) regulations.
  - Up to 20% more energy efficient than other models.
  - Environmentally friendly, including BPA-free plastic and recyclable parts.
- *Sanitation*
  - Plastic Food Zone eliminates hard-to-clean nooks and crannies, allowing for effortless wipe down and easy, long-lasting sanitation.
  - Built in Agion® ensures unbeatable antimicrobial protection.
  - Smart LED light indicates machine status and when cleaning is required.
  - Simple, one-touch controls for sanitization and descaling.
  - BPA-free snap-in, snap-out dishwasher-safe components.
- *Unique Dual Exhaust* - Air-cooled machines are designed to discharge hot air from both the side and top of the unit, increasing installation flexibility and reducing the potential of obstructed exhaust.
- *Universal Smart Harness™* control board simplifies installation and servicing with better access, digital diagnostics, universal components and common configuration.

Ice Form

FULL CUBE DIMENSIONS	
W x D x H (in.)	⅞ x ⅞ x ⅞
W x D x H (mm)	22 x 22 x 22
HALF CUBE DIMENSIONS	
W x D x H (in.)	⅜ x ⅞ x ⅞
W x D x H (mm)	10 x 22 x 22

CUBE

Bin Chart *Kits for Combining Wider Bins with Smaller Models*

	ICE STORAGE BINS										
Kits	**Model No.** Capacity Width	**B25** 242 lbs (110 kg) 30 in (762 mm)	**B40** 344 lbs (156 kg) 30 in (762 mm)	**B42** 351 lbs (160 kg) 22 in (559 mm)	**B55** 510 lbs (232 kg) 30 in (762 mm)	**B700** 680 lbs (308 kg) 30 in (762 mm)	**B110** 854 lbs (388 kg) 48 in (1,219 mm)	**B1000** 1,000 lbs (454 kg) 48 in (1,219 mm)	**B1300** 1,320 lbs (599 kg) 48 in (1,219 mm)	**B1325** 1,325 lbs (601 kg) 60 in (1,524 mm)	**B1660** 1,660 lbs (753 kg) 60 in (1524 mm)
CIM0836	Kit Not Required			N/A	Kit Not Required		BPF-1	Hold Down Securement Recommended			
CIM0835											

**See Ice-O-Matic Price List for Adapter Kits to combine ice makers with most available ice/beverage dispensers.*

Options & Accessories

WATER FILTERS		
Ice Machine Model	**Manifold**	
	System	Replacement
CIM0836	IFQ2	IOMQ (2)
CIM0835		

Note: All modular cube CIM units can be installed with manufacturer approved ozone delivery systems.

Ice Maker Warranty

COMMERCIAL WARRANTY	
Ice Maker	**3 YEARS** parts and labor
Evaporator and Compressor	**5 YEARS** parts
Evaporator (when enrolled in our filter program)	**7 YEARS** parts and labor

BPA Free

ELEVATION SERIES CUBE ICE MAKER
CIMO836/O835

Ice-O-Matic
Ice. Pure and Simple

CIMO836/O835 CUBE ICE MAKER

Air Cooled

Please note: air-cooled units require 6" (152 mm) clearance for air intake and exhaust.

A. Ice maker potable water in, 3/8" FPT.
B. Ice maker water out, 3/4" FPT.
C. Hole for electrical connections, 7/8".
D. Electrical connection junction box, 7/8".

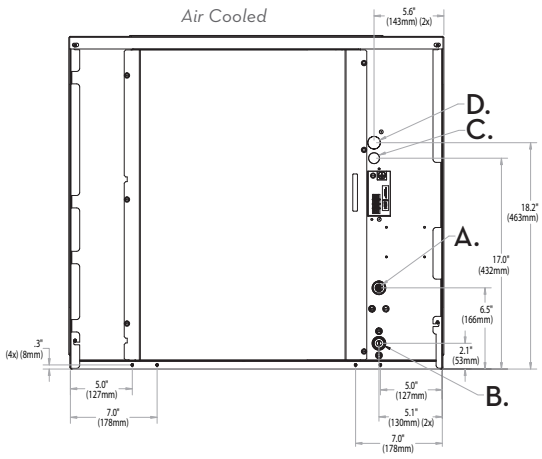

Water Cooled/Remote Cooled

A. Ice maker potable water in, 3/8" FPT.
B. Ice maker water out, 3/4" FPT.
C. Hole for electrical connections, 7/8".
D. Electrical connection junction box, 7/8" (remote).
E. Condenser water in, 3/8" FPT (water only). Discharge line, 1/2" male quick connect coupling for precharged line set (remote only).
F. Condenser water out, 1/2" FPT (water only).
G. Liquid line, 3/8" male quick connect for precharged line set (remote only).

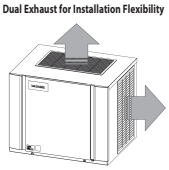

Water Cooled/ Remote Cooled

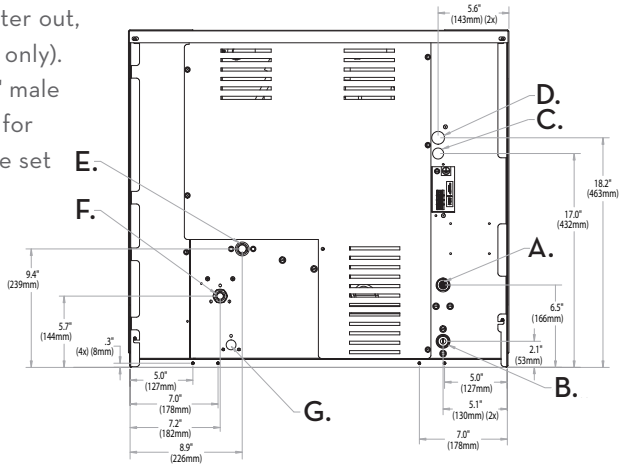

Operating Requirements

	MINIMUM	MAXIMUM	
		60 Hz	50Hz
Ambient Temp. Range Air	50°F (10°C)	100°F (38°C)	110°F (43°C)
Water Temp.	40°F (4.4°C)		
Water Pressure	20 PSIG (1.4 BAR)	80 PSIG (5.5 BAR)	

Dimensions

ALL MODELS	
W x D x H (in.)	30.25 x 24.25 x 26.9
W x D x H (mm)	768 x 616 x 683

Specifications

Model Number	Cond. Unit	Half-Cube Ice Production per 24hrs		Water Usage gallons per 100 lbs of Ice 90°F air/70°F water		kWH Used per 100 lbs of ice @ 90°F air/ 70°F water	Voltage Characteristics	Min. Circuit Ampacity	Fuse Size	Approx. BTUs per hour
		70°F air/ 50°F water lbs (kg)	90°F air/ 70°F water lbs (kg)	Potable	Condenser					
CIMO836A	Air	896 (406)	711 (322)	19.0	N/A	5.0	208-230/60/1	11.8	20	15,100
CIMO836R**	Remote	906 (411)	793 (360)		N/A	4.9		12.3		
CIMO836W	Water	896 (406)	798 (362)		140.0	4.2		11.3		
CIMO835A	Air	922 (418)	726 (329)	18.0	N/A	4.73	220-240/50/1	10.8	16	-
CIMO835R**	Remote	912 (413)	814 (369)		N/A	4.38		11.4		14,350
CIMO835W	Water	901 (409)	809 (367)		110.0	3.96		10.4		-

* Daily ice production based on half cube configuration. When installing a CIM on a drink dispenser, the **KCUBEDISPB MUST** be used.
** Remote models **CIMO836R** & **CIMO835R** require the **RCA-2061** remote condenser with optional grill guard kit.

Notes:
Number of Wires: 3 (including ground)
Approx. Shipping Weight lbs (kg): CIMO836A 220 (100) • CIMO836R 220 (100) • CIMO836W 210 (96) • CIMO835A 220 (100) • CIMO835R 220 (100) • CIMO835W 210 (96)
Refrigerant Type: CIMO835A = R404A

11100 E. 45th Avenue • Denver, CO 80239 • Phone: 1. 866. PURE. ICE • Fax: 303. 371. 6296 • www.iceomatic.com

Rev: 02/20
Part: C007

Ice-O-Matic
Ice. Pure and Simple

B1000-48

Features

- Application storage capacity from 680 lbs (308 kg) to 1660 lbs (753 kg).
- 31" deep for use where space is at a premium.
- Durable stainless-steel construction.
- First-in, first-out ice management for fresher ice.
- Corrosion-resistant poly bin liner.
- Heavy duty "stay-open" door for easy one hand access.
- Ice shield controls flow and reduces spills.

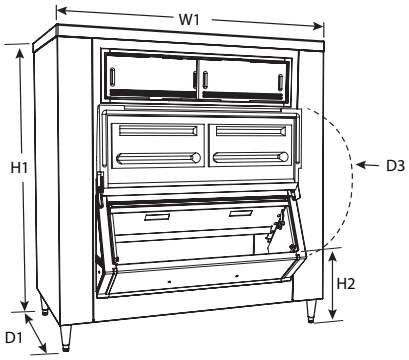

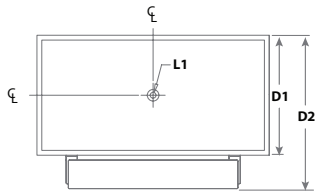

UPRIGHT BIN SPECIFICATIONS	
Maximum Bin Capacity	see model table below
W1 Width	see model table below
D1 Depth	see model table below
D2 Depth with lower door assembly (easily removed for installation access)	add 8.00" (20.32 cm) to D1
D3 Depth with door fully extended	add 18.50" (47.0 cm) to D1
H1 Height (adjustable)	see model table below
H2 Bin sill height	19.00" (48.3 cm)
Required door access	see model table below
L1 Drain Ice compatibility	1" FPT, center of bin bottom
Shipping weight	see model table below
NOTE: For indoor use only	

Model	Maximum Bin Capacity lb (kg)	Cubic Volume cu ft (m)	Width - W1 in (mm)	Depth - D1 in (mm)	Height - H1 in (mm)	Required Door Access in (mm)	Approximate Ship Weight lb (kg)
B700-30	680 (308)	21.7 (0.61)	30 (762)	31 (787)	60 (1524)	31 (787)	212 (96)
B1000-48	1000 (454)	31.9 (0.90)	48 (1219)	31 (787)	56 (1424)	32 (813)	268 (122)
B1300-48	1320 (599)	41.9 (1.19)	48 (1219)	31 (787)	65 (1651)	32 (813)	270 (123)
B1325-60	1325 (601)	42.0 (1.19)	60 (1524)	31 (787)	56 (1424)	32 (813)	320 (146)
B1600-60	1660 (753)	52.8 (1.50)	60 (1524)	31 (787)	65 (1651)	32 (813)	340 (154)

Ice-O-Matic
Ice. Pure and Simple™

UPRIGHT STORAGE BINS

Single Ice Machine Configurations

Ice-O-Matic offers a full line of bins for most applications. From low profile slope-front bins to high capacity space-saving uprights, we have a bin to meet any need. The following table will help you create the system you need in a safe and cost effective manner.

Bin Model No.	Style	CIM Series Cube Ice Makers			ICE Series Cube Ice Makers			Pearl Ice® Ice Makers		Flake Ice Machine	
		22" (565 mm) wide	30" (762 mm) wide	48" (1219 mm) wide	22" (565 mm) wide	30" (762 mm) wide	48" (1219 mm) wide	21" (533 mm) wide	30" (762 mm) wide	21" (533 mm) wide	30" (762 mm) wide
B25PP**	Slope Front	KBT19	△	N/A	KBT19	△	N/A	KBT19	△	KBT19	△
B40PS	Slope Front	KBT19	△	N/A	KBT19	△	N/A	KBT19	△	KBT19	△
B42PS	Slope Front	△	N/A	N/A	△	N/A	N/A	KBT24	N/A	KBT24	N/A
B55PS	Slope Front	KBT19	△	N/A	KBT19	△	N/A	KBT19	△	KBT19	△
B110PS	Slope Front	KBT23C	BPF-1***	△	N/A	BPF-1***	△	KBT23C	BPF-1***	KBT23C	BPF-1***
B700-30	Upright	△	△	△	△	△	△	△	△	△	△
B1000-48	Upright	△	△	△	△	△	△	△	△	△	△
B1300-48	Upright	△	△	△	△	△	△	△	△	△	△
B1325-60	Upright	△	△	△	△	△	△	△	△	△	△
B1600-60	Upright	△	△	△	△	△	△	△	△	△	△

*** Rotocast finish*
**** BPF-1 used with B110 bins only. If you have an older model B100 use the KBT5.*
△ Kit not required
N/A - Ice Machine and Bin Configurator not applicable

Side-by-Side Ice Machine Configurations

There are times when it is desirable to install (2) ice machines side-by-side on a bin. The reasons may range from gaining maximum output to creating redundancy. Ico-O-Matic offers on arra of kits and bins with custom order tops for just such applications. The following table will help you create the system you need in a safe and cost effective manner.

Bin Model No.	Style	CIM Series Cube Ice Makers		ICE Series Cube Ice Makers		Pearl Ice® Ice Makers		Flake Ice Machine	
		TWO 22" (565 mm) wide	TWO 30" (762 mm) wide	TWO 22" (559 mm) wide	TWO 30" (762 mm) wide	TWO 21" (533 mm) wide	TWO 30" (762 mm) wide	TWO 21" (533 mm) wide	TWO 30" (762 mm) wide
B25PP**	Slope Front	N/A	N/A	N/A	N/A	N/A	N/A	N/A	N/A
B40PS	Slope Front	N/A	N/A	N/A	N/A	N/A	N/A	N/A	N/A
B42PS	Slope Front	N/A	N/A	N/A	N/A	N/A	N/A	N/A	N/A
B55PS	Slope Front	N/A	N/A	N/A	N/A	N/A	N/A	N/A	N/A
B110PS	Slope Front	KBT222	N/A	N/A	N/A	KBT222	N/A	KBT222	N/A
B700-30	Upright	N/A	N/A	N/A	N/A	N/A	N/A	N/A	N/A
B1000-48	Upright	△△	N/A	△△	△△	△△	N/A	△△	N/A
B1300-48	Upright	△△	N/A	△△	△△	△△	N/A	△△	N/A
B1325-60	Upright	△△	KBTF230*	△△	KBTF21506	△△	KBTF230	△△	KBTF230
B1600-60	Upright	△△	KBTF230*	△△	KBTF21506	△△	KBTF230	△△	KBTF230

** Must use remote or water cooled model only*
*** Rotocast finish*
△△ Kit not required
N/A - Ice Machine and Bin Configurator not applicable

Bin Accessories

Ice-O-Matic Part Number	Description
1011517-22	Plastic ice shovel
1011517-23	Hanging bracket for ice shovel
1011517-24	46.5" Plastic paddle
1051517-29	Hanging bracket for ice paddle
9051127-01	82 Ounce ice scoop