BLACK◆DIAMOND®

Gas Range/Griddle Combos - BDGR/G Series

Black Diamond's gas range/griddle combos are constructed of stainless steel fronts with aluminized sides. These gas range/griddle combos provide the most optimum cooking performance. 12" x 12" heavy duty cast iron grates allow you to easily slide heavy pots from one section to another, while a unique anti-clogging pilot shield ensures that the open top burners deliver long-lasting performance. The unit's have a 3/4" thick griddle plate with a manual control and a 24" wide cooking area. With it's deep cooking area, and a 5" front ledge these ranges provides you with plenty of room to work. The standard sized oven(s) each have 30,000 BTUs of cooking power and a unique double-wall flame spreader with temperature diverters to ensure even heat distribution. The oven's interior has a porcelain bottom. 6" stainless steel legs and 24.75" high backriser. ¾" rear NPT gas connection. ETL Listed and ETL Sanitation.

BDGR-3624G
BDGR-6024G
BDGR-6024GB

Construction

- Stainless steel front, backriser and shelf
- 30,000 BTU/hr top burners with lift-off heads
- 12" x 12" cast iron removable top grates
- Individual pilot light for each burner
- Spring loaded door with cool to touch s/s handle
- Removable crumb tray for easy cleaning
- 3/4" rear NPT gas connection
- LPG conversion kit included
- 6" adjustable stainless steel legs

BDGR-3624G

Oven Features

- 30,000 BTU/hr total output
- Flame failure safety device
- Adjustable thermostat ranges from 250°F-550°F
- Steel liner on door and sides with a porcelain oven liner
- Includes 2 removable and adjustable oven racks per oven
- Cool to touch stainless steel oven door handle

BDGR-6024G

Top Burners

- Cast iron burners each giving off 30,000 BTU/hr
- 12" x 12" cast iron top grates are removable for easy cleaning and maintenance
- Each burner has an individual standing pilot light and control knob
- Extra 2" ledge between the burners and backsplash provides more room for bigger pots and pans during use

Griddle/Broiler

- 3/4" thick polished steel griddle plate
- 24"W x 21"D cooking area
- Each burner has an individual standing pilot light and control knob
- Raised griddle/broiler on the FMGR-6024GB model has an 8.25" high opening and has a built-in broiler rack that slides in and out and has an adjustable height
- 3" high sides and backsplash are fully welded
- Includes removable crumb and drip trays for easy cleaning

BDGR-6024GB

Black Diamond warrants this product to be free of defects in materials and workmanship for period of 1 year from the date of original installation.

Intertek Intertek

BLACK◆DIAMOND

Gas Range/Griddle Combos

Plan View

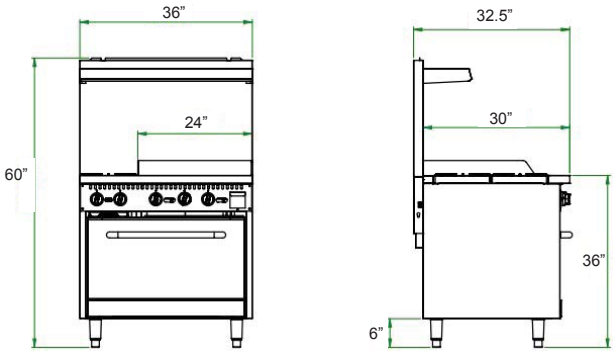

BDGR-3624G

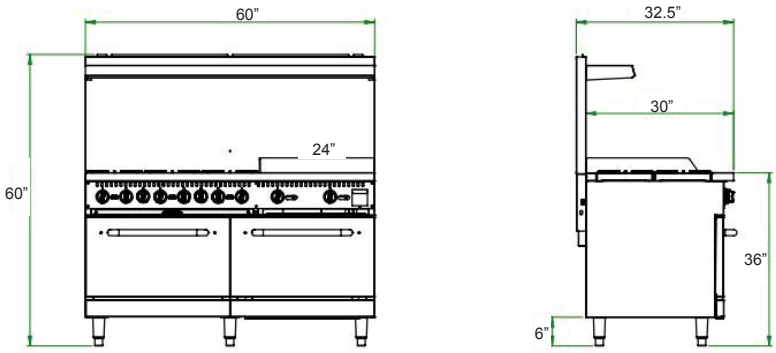

BDGR-6024G

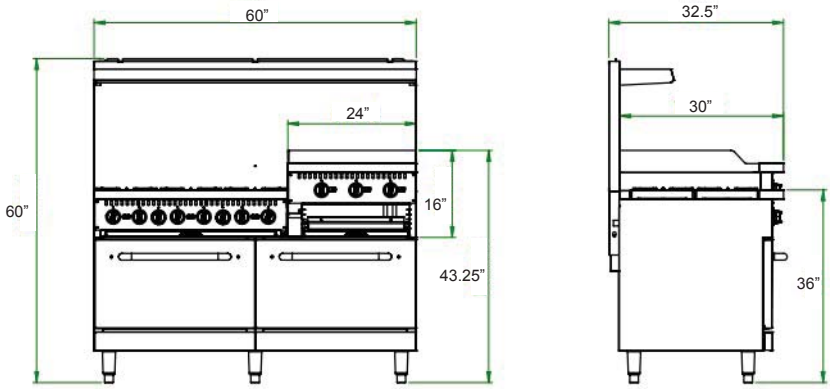

BDGR-6024GB

Specifications

Model Number	Description	Total BTU/hr	Gross Weight	Net Weight
BDGR-3624G/NG	36” Gas Range w/oven, 2 Burners, 24” Griddle NG	130,000	507 lbs	403 lbs
BDGR-6024G/NG	60” Gas Range w/2 ovens, 6 Burners, 24” Griddle NG	280,000	815 lbs	683 lbs
BDGR-6024GB/NG	60” Gas Range w/2 ovens, 6 Burners, Raised 24” Griddle/Broiler NG	276,000	860 lbs	727 lbs

Model Number	Overall Dimensions	Oven Cavity Dimensions	Crumb Tray	Fit Full Size Pan (18”x26”)
BDGR-3624G/NG	36”W x 32.5”D x 60”H	26.75”W x 26”D x 14”H	1	Yes
BDGR-6024G/NG	60”W x 32.5”D x 60”H	26.75”W x 26”D x 14”H (2 ovens)	2	Yes
BDGR-6024GB/NG	60”W x 32.5”D x 60”H	26.75”W x 26”D x 14”H (2 ovens)	2	Yes